组会报告

蓝 鑫

2020年3月26日

Motivation

G. Xu, Q. Zhang, D. Liu, G. Lin, J. Wang and Y. Zhang, "Adversarial Adaptation From Synthesis to Reality in Fast Detector for Smoke Detection," in IEEE Access, vol. 7, pp. 29471-29483, 2019.

视频烟雾检测是一种很有前途的早期防火方法。

问题 1：缺少足够的样本。
解决：现有的烟雾样本在规模和多样性上都有一定的局限性，因此应用了带有边界框标注的合成烟雾样本（渲染器Mitsuba合成）。

问题 2：人造烟雾数据和现实烟雾数据之间存在差距，针对合成烟雾样本训练的模型在实际场景中表现不佳。
解决：利用带标注的合成烟雾图像，将域适应和检测相结合进行烟雾检测。设计了一种对抗训练策略，使在合成烟雾图像上训练的检测器模型适应现实场景。

Architecture

G. Xu, Q. Zhang, D. Liu, G. Lin, J. Wang and Y. Zhang, "Adversarial Adaptation From Synthesis to Reality in Fast Detector for Smoke Detection," in IEEE Access, vol. 7, pp. 29471-29483, 2019.

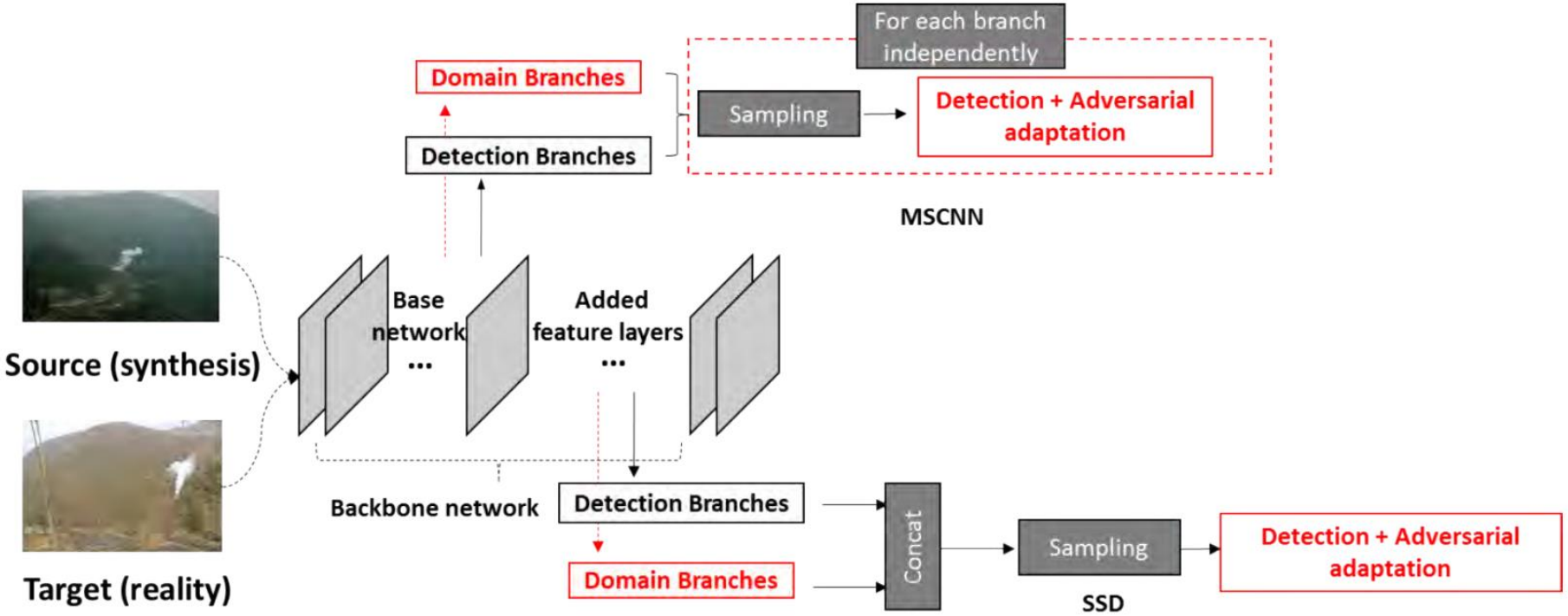

MSCNN:

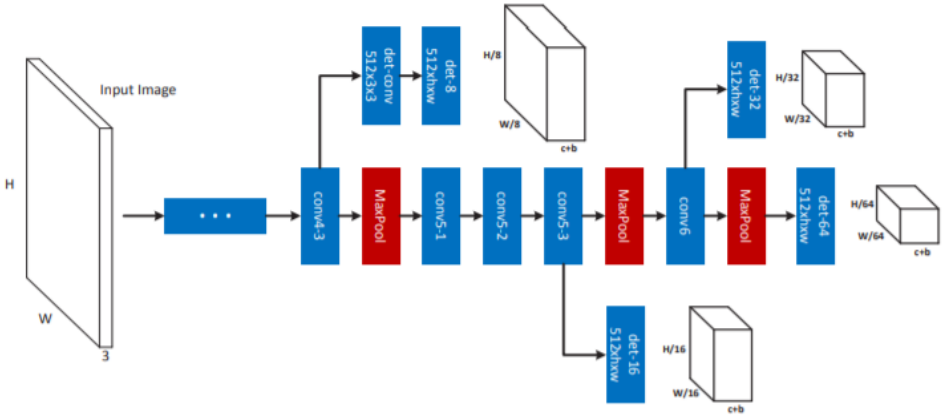

SSD:

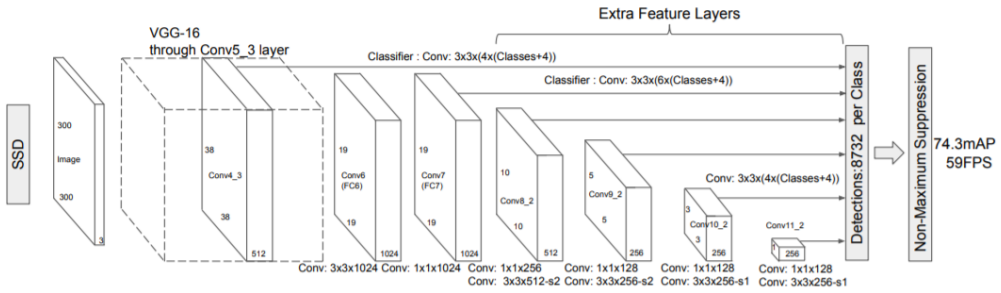

Architecture

G. Xu, Q. Zhang, D. Liu, G. Lin, J. Wang and Y. Zhang, "Adversarial Adaptation From Synthesis to Reality in Fast Detector for Smoke Detection," in IEEE Access, vol. 7, pp. 29471-29483, 2019.

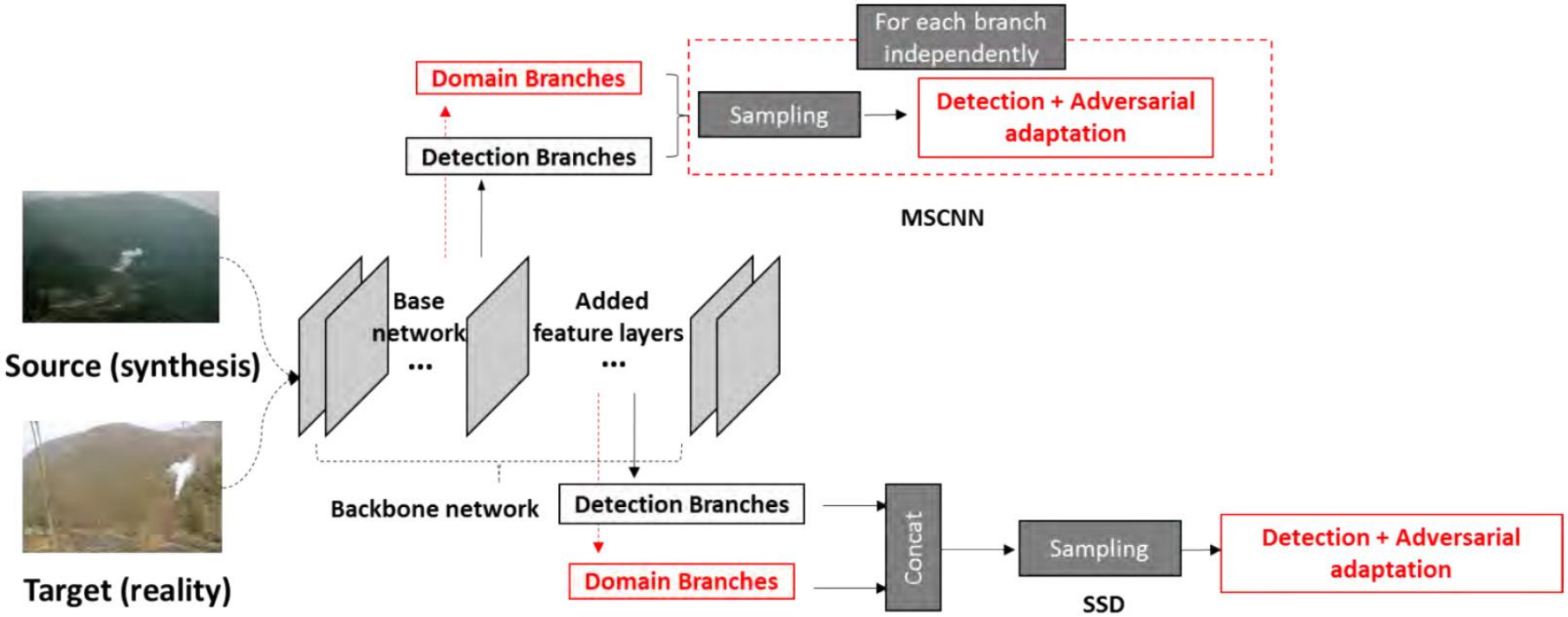

SSD 使用两个分支预测位置和类别。

MSCNN 使用一个分支预测。

域分支预测域类别得分，表示对应框属于域类别的概率(合成或现实)。

sampling 是匹配 和 难负样本挖掘

Adversarial Adaption SSD

G. Xu, Q. Zhang, D. Liu, G. Lin, J. Wang and Y. Zhang, "Adversarial Adaptation From Synthesis to Reality in Fast Detector for Smoke Detection," in IEEE Access, vol. 7, pp. 29471-29483, 2019.

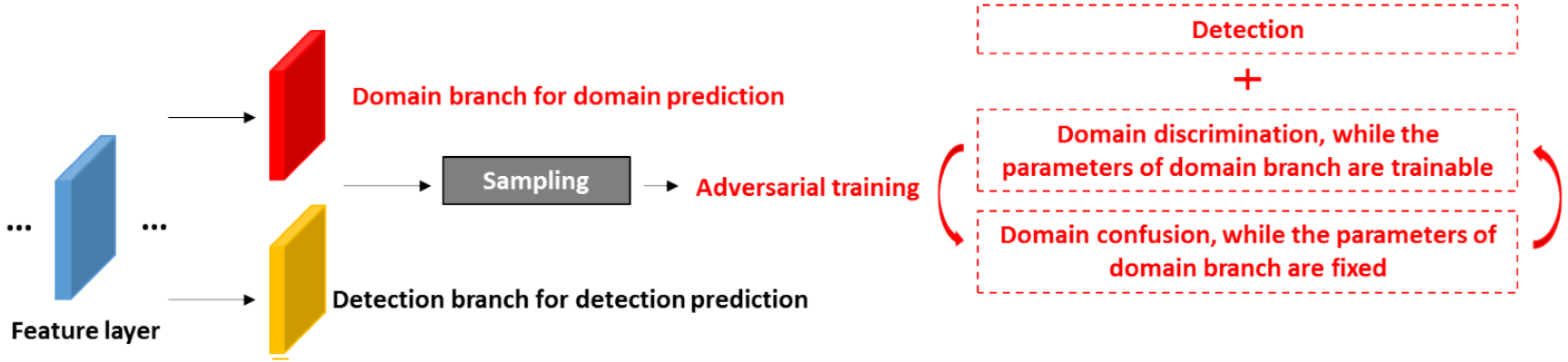

先使用合成的标注样本训练基准 SSD，然后使用真实和合成样本进行域适应训练。

检测损失：
$$L_{multibox}(\theta_{base}, \theta_{add}, \theta_{lc}) = \frac{1}{N}(L_{conf}(x, c) + \alpha L_{loc}(x, l, g))$$

域判别损失：
$$L_{dc}(\theta_{add}; \theta_{base}, \theta_{lc}, \theta_{domain}) = -\sum_{d\in\{syn,real\}} R_{x_d\sim X_d}[\log K(D_{domain}(M_{backbone}(X_d)))]$$

θadd 固定

域混淆损失：
$$L_{dm}(\theta_{domain}; \theta_{base}, \theta_{add}, \theta_{lc}) = -\sum_{d\in\{syn,real\}} R_{x_d\sim X_d}[\frac{1}{2}\log K(D_{domain}(M_{backbone}(X_d))) + \frac{1}{2}\log(1 - K(D_{domain}(M_{backbone}(X_d))))] \quad (4)$$

θdomain 固定，使用反向标注训练，这样 backbone 相当于扮演了生成器的角色。

Evaluation

G. Xu, Q. Zhang, D. Liu, G. Lin, J. Wang and Y. Zhang, "Adversarial Adaptation From Synthesis to Reality in Fast Detector for Smoke Detection," in IEEE Access, vol. 7, pp. 29471-29483, 2019.

Mean location accuracy:

$$\alpha_{all} = \frac{1}{N} \sum_{n=1}^{N} \frac{\sum_{i=1}^{m} (B_n^{GT} \cap B_i)}{\sum_{i=1}^{m} B_i}$$

BGT 是烟雾的真实分割区域，Bi 是预测的带有自信分数的边界框，m 是 Bi 在测试图片中的数量。

FIGURE 4. From left to right: detection boxes in test image, overlap (area in red) between predicted box and segmented region of smoke.

Data

G. Xu, Q. Zhang, D. Liu, G. Lin, J. Wang and Y. Zhang, "Adversarial Adaptation From Synthesis to Reality in Fast Detector for Smoke Detection," in IEEE Access, vol. 7, pp. 29471-29483, 2019.

FIGURE 3. Display of the part of image dataset. The top 4 rows represent synthetic smoke samples in training set. The 5th row represents real smoke images in training set. And the bottom row represents real smoke images in test set. The datasets are publicly available on http://smoke.ustc.edu.cn.

Experiment

G. Xu, Q. Zhang, D. Liu, G. Lin, J. Wang and Y. Zhang, "Adversarial Adaptation From Synthesis to Reality in Fast Detector for Smoke Detection," in IEEE Access, vol. 7, pp. 29471-29483, 2019.

TABLE 1. The mean location accuracy (%) on the test set. The adapted model are trained using the synthetic smoke image set as source domain and real smoke image set as target domain. The original detectors are trained using the real smoke image set, synthetic smoke image set, and the mixed image set respectively. The input size of the adapted detector keep the same as the size in the original work of baseline. Meanwhile, the parameter numbers and computational costs of baselines and added domain branches are calculated. As the architecture of the adapted detector is the same as that of the baseline during the test procedure, the time cost of adapted model also remains the same as the original model. An NVIDIA GTX 1080 was used for the computations in test procedure.

	Original detectors					Adapted detectors			Time (s)	
				Baseline			Added domain branches			
	Reality	Synthesis	Reality+ Synthesis	MultAdds (Million)	Parameters (Million)	Source (synthesis) + Target (reality)	MultAdds (Million)	Parameters (Million)	GPU	CPU
SSD_ZF (300×300)	31.90	36.88	47.40	4279	10.34	56.90	77.26	0.25	0.06	-
SSD_VGG16 (300×300)	43.77	49.51	54.50	30427	23.74	64.17	99.56	0.27	0.16	-
MSCNN-VGG16 (576×768)	38.26	42.15	48.54	138407	17.98	51.91	695.62	0.30	0.21	-
Yuan [2]	22.90								-	0.02